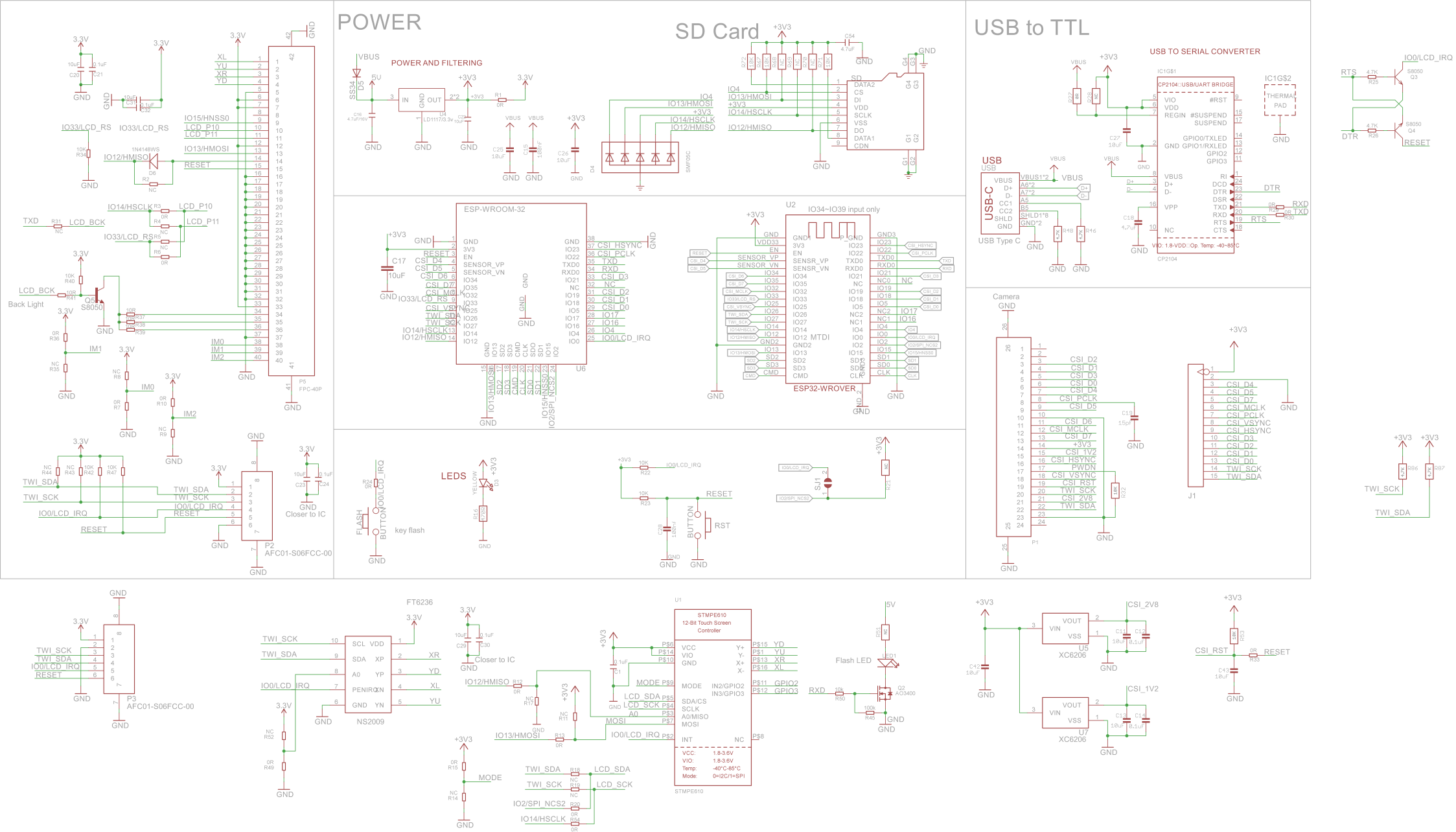

ESP32 TFT Touch with Camera(3.2" ili9341) v1.1

www.makerfabs.com

Design by Charlin