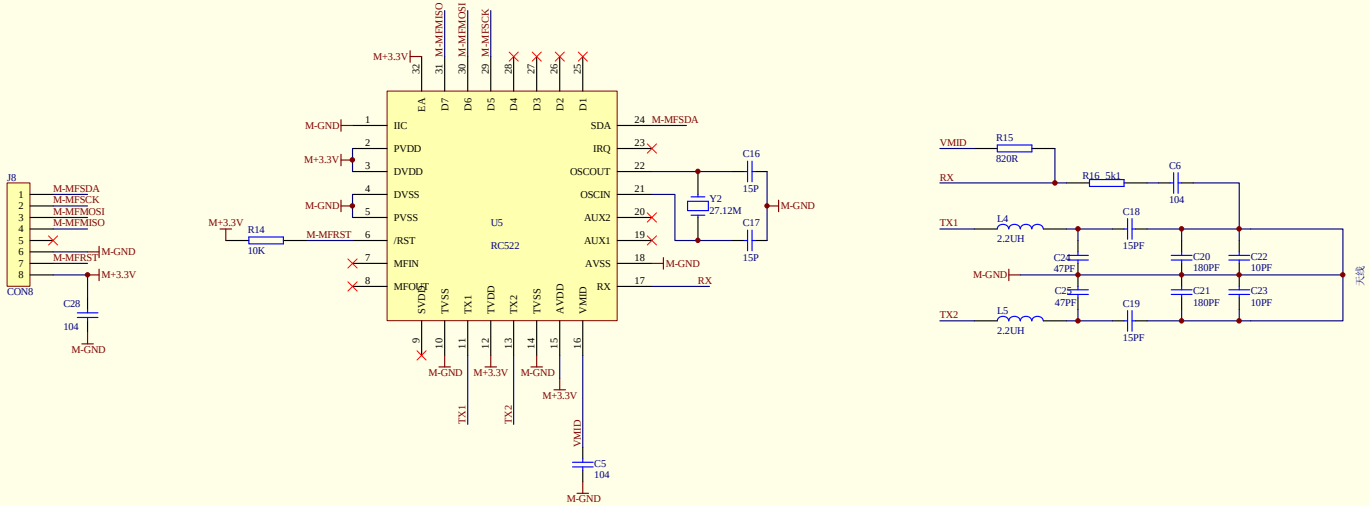

Title		
Size B	Number	Revision
Date: 25-Sep-2010		Sheet of
File: C:\Documents and Settings\sam\桌面\开发\PROTEL\MFRC522_STC_NOJCB.ddb		Drawn By: