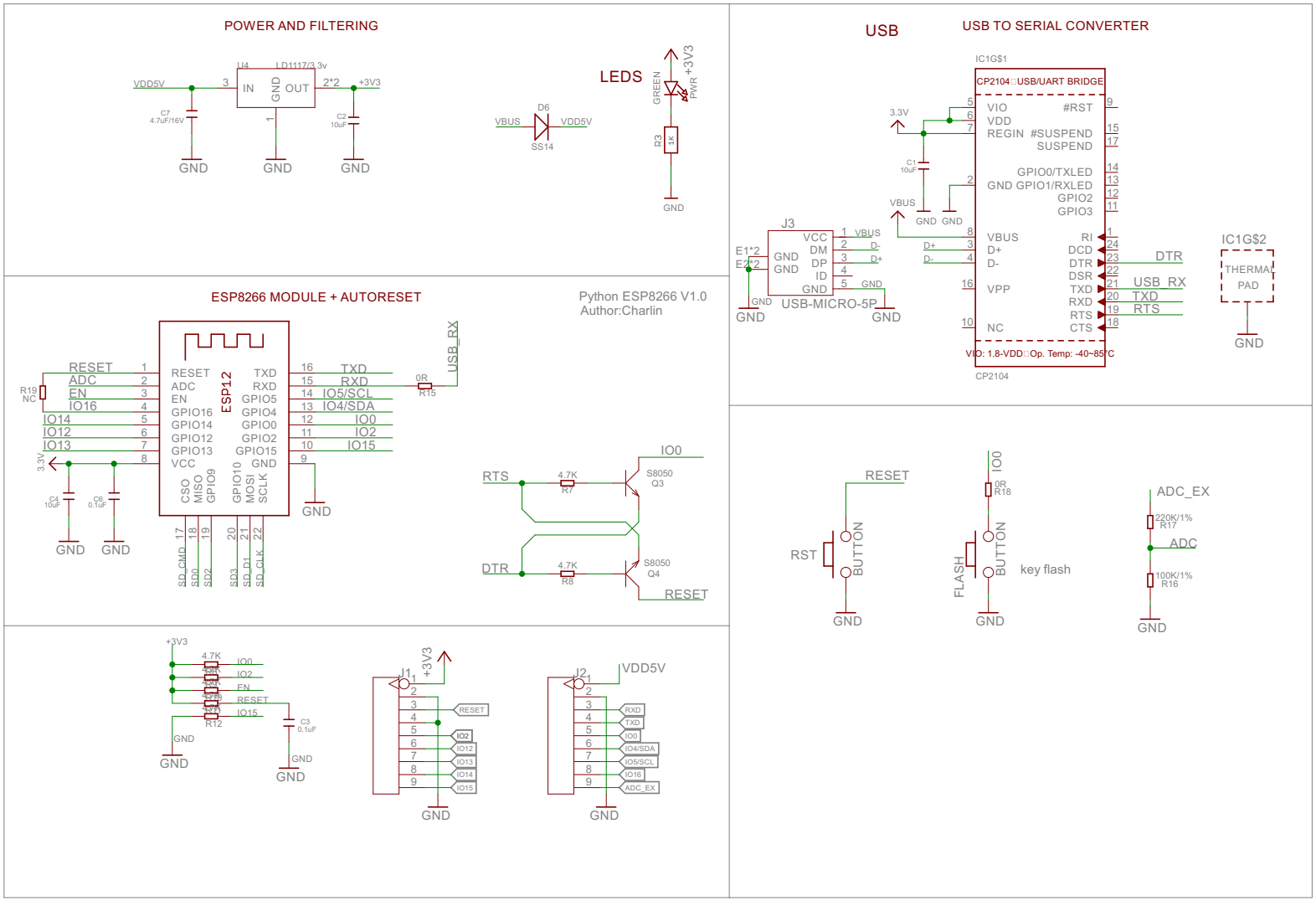
POWER AND FILTERING
U4
LD1117/3.3v
VDD5V
IN
GND
OUT
2*2
+3V3
C7
4.7uF/16V
C2
10uF
GND
GND
GND
LEDS
D6
VBUS
VDD5V
SS14
GREEN
PWR
+3V3
R3
1K
GND
USB
USB TO SERIAL CONVERTER
IC1G$1
CP2104□USB/UART BRIDGE
VIO
VDD
REGIN
#RST
#SUSPEND
SUSPEND
GPIO0/TXLED
GND GPIO1/RXLED
GPIO2
GPIO3
VBUS
D+
D-
VPP
NC
RI
DCD
DTR
DSR
TXD
RXD
RTS
CTS
VIO: 1.8-VDD□Op. Temp: -40~85°C
CP2104
3.3V
C1
10uF
VBUS
GND GND
J3
VCC
DM
DP
ID
GND
VBUS
D-
D+
GND
USB-MICRO-5P
E1*2
E2*2
GND
GND
GND
DTR
USB_RX
TXD
RTS
IC1G$2
THERMAL
PAD
GND
ESP8266 MODULE + AUTORESET
Python ESP8266 V1.0
Author:Charlin
ESP12
RESET
ADC
EN
GPIO16
GPIO14
GPIO12
GPIO13
VCC
CSO
MISO
GPIO9
GPIO10
MOSI
SCLK
TXD
RXD
GPIO5
GPIO4
GPIO0
GPIO2
GPIO15
GND
IO5/SCL
IO4/SDA
IO0
IO2
IO15
R19
NC
0R
R15
USB_RX
3.3V
C4
10uF
C6
0.1uF
GND
GND
GND
SD_CMD
SD0
SD2
SD3
SD_D1
SD_CLK
RTS
4.7K
R7
S8050
Q3
IO0
DTR
4.7K
R8
S8050
Q4
RESET
RESET
RST
BUTTON
GND
IO0
0R
R18
FLASH
BUTTON
key flash
GND
ADC_EX
220K/1%
R17
ADC
100K/1%
R16
GND
+3V3
4.7K
IO0
IO2
EN
RESET
IO15
R12
GND
C3
0.1uF
GND
GND
J1
+3V3
RESET
IO2
IO12
IO13
IO14
IO15
GND
J2
VDD5V
RXD
TXD
IO0
IO4/SDA
IO5/SCL
IO16
ADC_EX
GND
NC(GND)
C2P
C2N
C1P
C1N
VBAT
NC
VSS
VDD
BS0
BS1
BS2
CS#
RES#
D/C#
R/W#
E/RD#
D0
D1
D2
D3
D4
D5
D6
D7
IREF
VCOMH
VCC
VLSS
N.C.(GND)
OLED1
OLED-1.3
C18
1uF/16V
C19
1uF/16V
3.3V
C8
10uF
C9
0.1uF
R1
4.7K
D7
SS14
C11
0.1uF
GND
3.3V
R2
4.7K
R4
4.7K
R13
NC
IO5/SCL
IO4/SDA
0R
R14
910K
R5
C16
4.7uF/16V
C17
2.2uF/16V
GND